VLX50LP-GR　　上海驰田 021-51085793

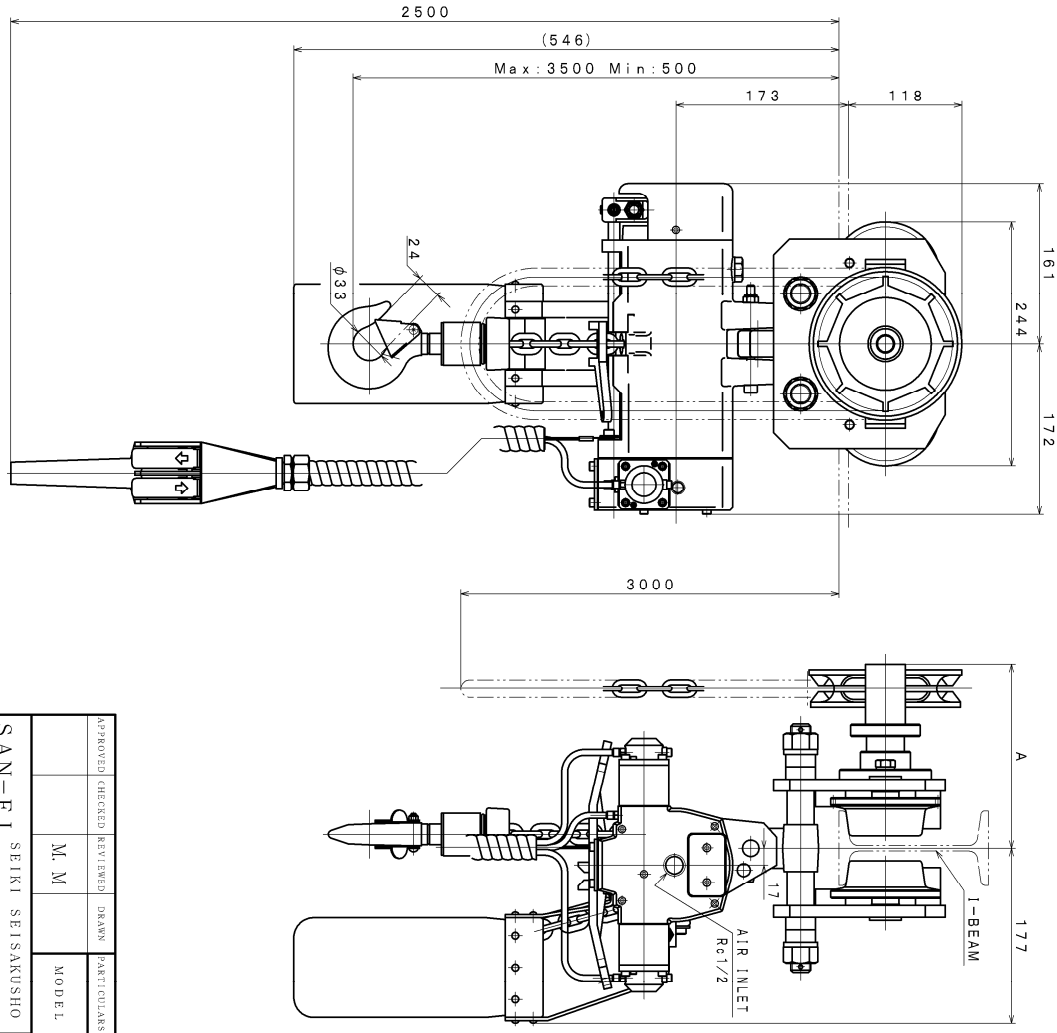

SPECIFICATION

AIR PRESSURE	(MPa)	0.4	0.5	0.6
CAPACITY	(kg)	500		
LIFTING SPEED	(m/min)	7	10	12
AIR CONSUMPTION	(Nm³/min)	1.0	1.3	1.6
LIFT	(m)	3		
MASS	(kg)	about 46.5		

I Beam wide size	A
75	185
100	198
125	210

SIGN	REVISION	DATE	BY
△			

APPROVED	CHECKED	REVIEWED	DRAWN
		M. M	

SAN-EI SEIKI SEISAKUSHO CO., LTD.

PARTICULARS	OUTLINE DRAWING
MODEL	VLX50LP-GR AIR HOIST
DWG. NO.	E303-242△
NOTE	Z96-058
DATE	Dec. 16. 2003
SCALE	1/4